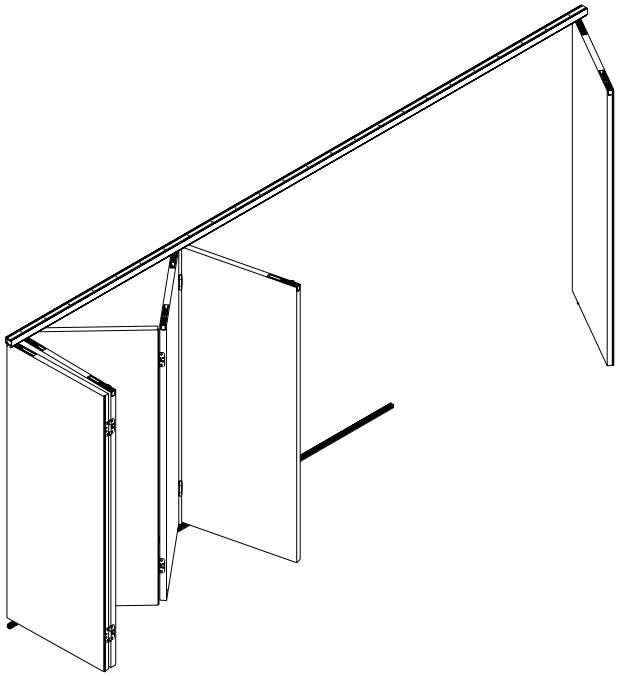

Flush partition walls with flexible folding.

Hardware system for large wooden folding walls with panel weighing up to 80 kg (176 lbs.).

Description

HAWA-Variofold 80/H is a hardware system for wooden folding walls with up to 80 kg (176lbs.) heavy panels. Installations are simple to plan, and quick to assemble. A pivot bearing secures the first panel in the set; the others line by means of elegant, stainless steel hinges that bring the panels closer together and minimise panel stacking space requirements. The panel set and the opposing end may also have a pivot door fitted. Attached to every other panel is a folding-/pivot door catch with an integrated, individually adjustable retainer, to hold the folding wall flush when closed.
With HAWA-Variofold 80/H, panels are quided in a bottom guide channel. Installations with two panels on either side and up to 3,6 m (11'9 3/4") wide are also possible without a bottom guide channel. A bar bolt lock operated at handle height keeps out unwanted visitors. Alternatively, an unobtrusive deadbolt lock fitted to the bottom edge of the panel provides almost invisible locking.

Applications

Any situation where a simply operated, high-quality folding system is needed to partition a room. Equally suitabel for residential and commercial settings, e.g. shopping centres, airports, hotels, restaurants and banks. 2-piece thoroughfare doors in place of conventional hinged doors are most convenient in living space designed for handicapped people.

Features of the HAWA-Variofold 80/H

- Minimum panel width 500 mm (1'7 11/16")
- Maximum panel width 900 mm (2'11 7/16")
- Panel thickness 35–45 mm (1 3/8"–1 25/32")
  [Panel thickness 46–57 mm (1 13/16"–2 1/4") available on special request]
- Maximum panel weight 80 kg (176 lbs.)
- Left and right-hand, inwards or outwards-opening installations all use the same components
- A communicating pivot door can be added to the panel stack, or the opposing end
- Equal-width panels for simple planning
- Vertical adjustment ± 3 mm (1/8")
- Light and quiet running
- Panel stack stores compactly

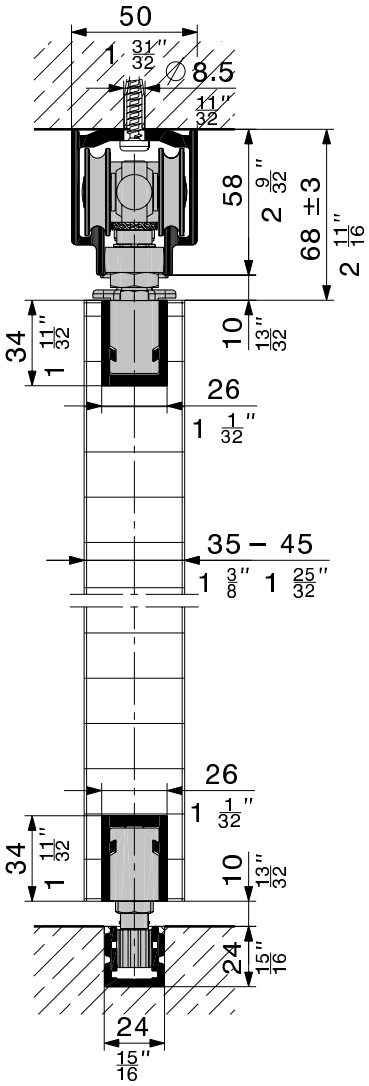

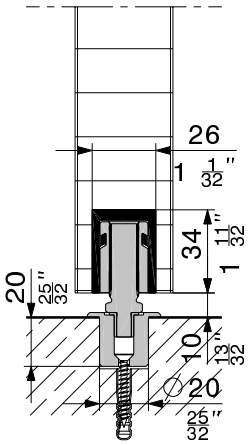

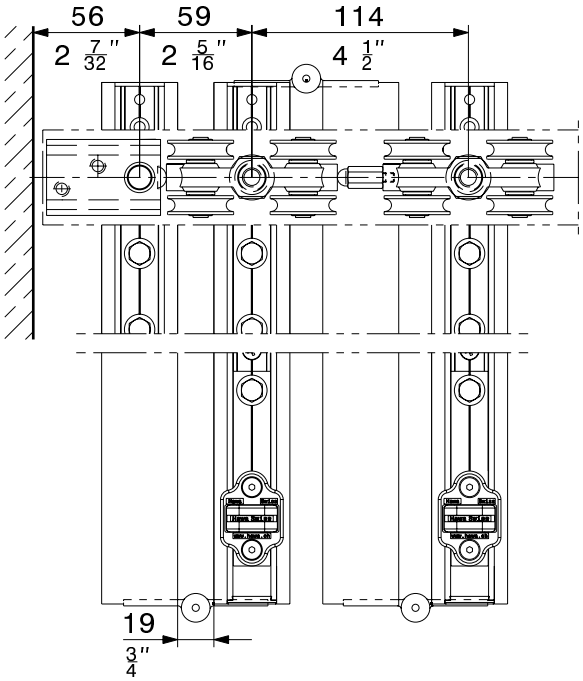

Partial sets without hinges, running track and bottom guide channel

Sets can be individually assembled		code
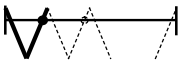	Basic set with pivot bearing and guide	19532
	Basic set with pivot bearing without guide	19534
	Additional set with guide	19533
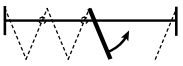	Pivot door set to folded stack (without trolley and top pivot bearing)	19620
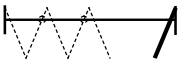	Pivot door set for installation with bottom guide channel	19618
	Pivot door set for installation without bottom guide channel	19619
HAWA-Variofold 80/H requires a bottom guide channel, except for 2 or 2 + 2 panel installations. (→ installation examples)		

Partial sets comprising

		19532	19534	19533	19620	19618	19619	code
	Top pivot bearing	1	1	–	–	1	1	16485
	Folding-/pivot door catch, adjustable	1	1	1	1	1	1	20426
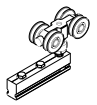	Four-wheeled trolley, M10, plastic-tyred wheels and suspension plate	1	1	–	–	–	–	16482
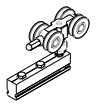	Four-wheeled trolley, M10, plastic-tyred wheels with suspen-sion plate and spacer	–	–	1	–	–	–	16685
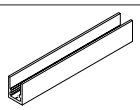	Suspension profile alu, 208 mm (8 $\frac{3}{16}$") plain anodized, predrilled	5	4	3	1	3	3	10987
	Thrust bearing for bottom guide channel, including driver	1	–	–	–	1	–	19516
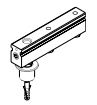	Thrust bearing sleeve, D = 20 mm ($\frac{25}{32}$"), including driver	–	1	–	–	–	1	19515
	Guide, rattle proof, plastic, for bottom guide channel 24 x 24 mm ($\frac{15}{16}$" x $\frac{15}{16}$")	1	–	1	–	–	–	19518
	Cover cap for top fixed suspension, plastic anthracit-grey RAL 7016	5	4	3	1	3	3	20907
	Vertical adjustment key	1	1	–	–	–	–	10789
	Suspension assembly locking wrench	1	1	–	–	–	–	14861
	Fork spanner SW 13 mm ($\frac{17}{32}$")	1	1	–	–	–	–	19128

Installation examples

One-sided installations filling an aperture up to 6000 mm (19'8 $\frac{7}{32}$") width are possible using the 2-panel basic sets, supplementary and pivot door sets – or double this figure for two-sided installations. HAWA-Variofold 80/H requires a bottom guide channel, except for 2 or 2 + 2 panel installations.

Installations with or without a bottom guide channel

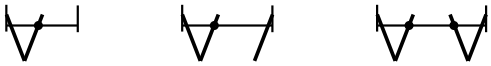

Installations with a bottom guide channel

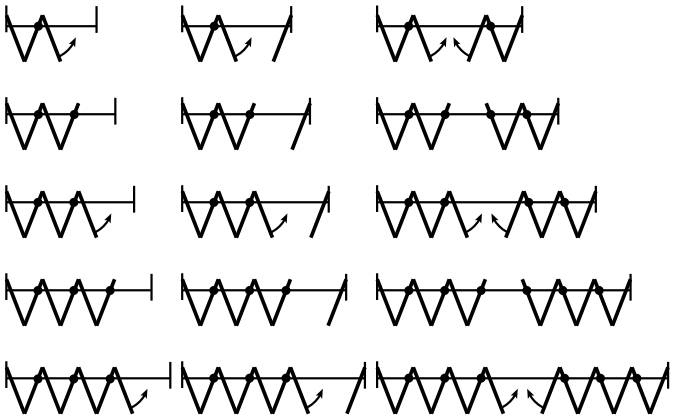

These examples illustrate just some of the possibilities.

Subject to modification. Metric specifications are exact. Inches are approximate.

Running tracks

Caution: Hole positions vary		mm/inch	code
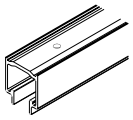	Running track alu, plain anodized, predrilled	6000 (19'8 7/32")	16852
		cut to size	16853

Bottom guide channel

		mm/inch	code
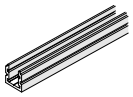	Bottom guide channel alu, plain anodized, undrilled	6000 (19'8 7/32")	15405
		cut to size	15554

Hinge

		code
	Stainless steel hinge with heavy load bearings WNR 1.4401/AISI 316, incl. fixing screws	23271

Quantity of hinges per panel joint:
Panel height ≤ 2500 mm (8'2 7/16") = 2 pcs.
Panel height ≤ 3500 mm (11'5 13/16") = 3 pcs.

Hollow seal

			code
	Hollow seal, rubber black	Roll of 10 m (32'9 23/32")	19657

Hinge

High loadbearing capacity means that panels up to 2500 mm (8'2 7/16") tall require just two hinges.

Hinge positions

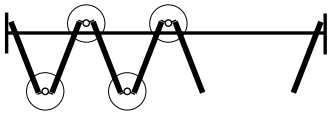

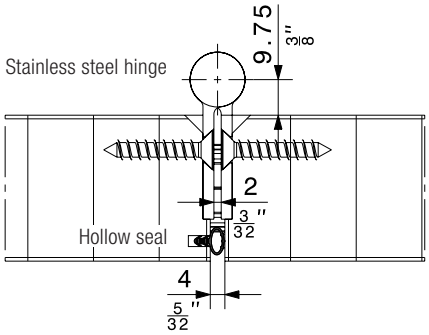

Hollow seal

Hollow cross-section seal strips eliminate the problem of light penetrating through gaps between panels.

Hollow seal positions

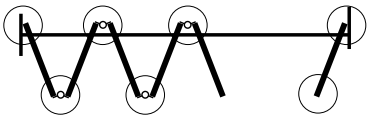

Folding-/pivot door catch

Every other panel has a folding-/pivot door catch (20426). Panels can thus be held flush in position without operating a locking mechanism.

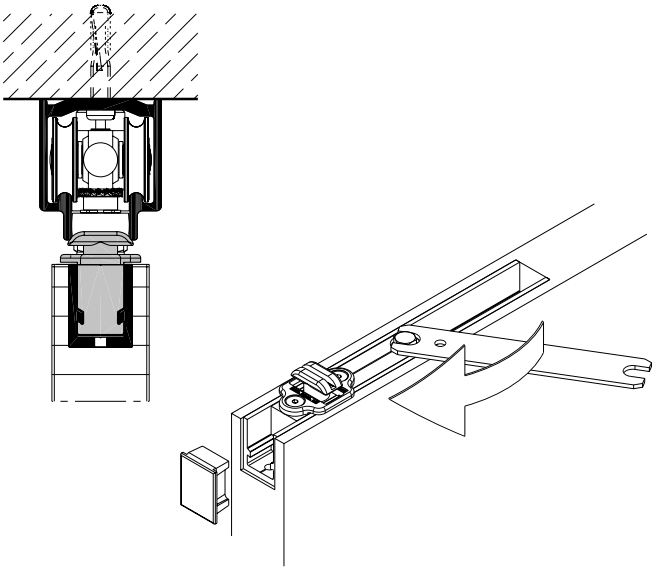

Wall attachment

Hawa AG recommends a compensation strip for optimum wall attachment. In combination with hollow seal code 19657, this results in the elimination of the light gap and reduces draughts to a minimum. Doors that close directly against the wall must have 6 mm (1/4") clearance.

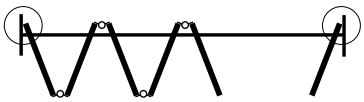

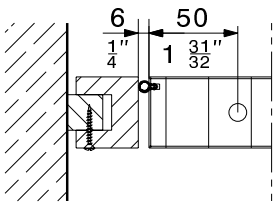

Version A
With premises-fitted compensation strip and hollow seal code 19657

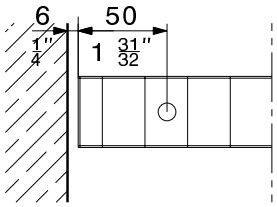

Version B
Direct wall attachment requires 6 mm (1/4") clearance

Subject to modification. Metric specifications are exact. Inches are approximate.

Locks

		code
	Deadbolt lock, galv. steel deadbolt 13 mm ($\frac{17}{32}$")	10726
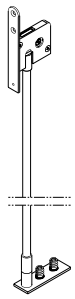	Bar bolt lock, square/hexagonal socket, backset 42,5 mm ($1\frac{11}{16}$") Assembly dimensions: → page 81	19592
	Thumbturn, chomium finish, for panel thickness 35 to 40 mm ($1\frac{3}{8}$" to $1\frac{19}{32}$")	13789
	Thumbturn, chomium finish, for panel thickness 41 to 57 mm ($1\frac{5}{8}$" to $2\frac{1}{4}$")	19806
	Slip-fit rose, brass dull nickel finish	13858
	Key for deadbolt lock 10726	10723
	Floor-mounted sleeve with oblong hole and chromium plated brass spring cover	13787
	Rosette for floor-mounted sleeve 13787	17326
	Strike plate, chromium-plated steel	13130

Deadbolt lock

The deadbolt lock code 10726 provides unobtrusive, barely visible locking at the panel bottom edge.

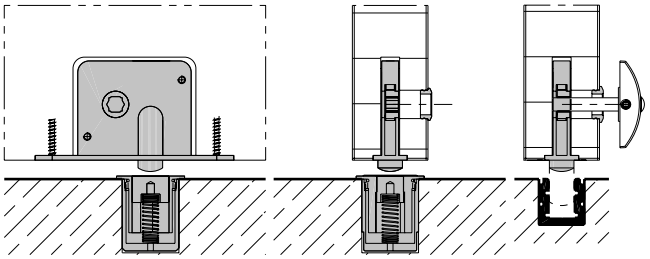

Locking with floor-mounted sleeve code 13787

Locking with bottom guide channel code 15554

Order specifications

- Type and quantity of partial sets
- Length of running track
- Length of bottom guide channel
- Quantity of hinges, → calculation details

Optional order specifications

- Type and quantity of locks
- Quantity of hollow seals

Planning/installation

For planning and installation purposes, please use planning and installation instructions code 19586.
And for door thicknesses 46–57 mm additionally code 20085.
(→ www.hawa.ch → HAWA-Productfinder)

Locks

Additional deadbolt or bar bolt locks may be fitted for security, and to keep out unwanted visitors.
Locking from the inside engages the floor-mounted sleeve code 13787 or the bottom guide channel code 15554. Mortice locks can be used to secure pivot doors.

Lock positions

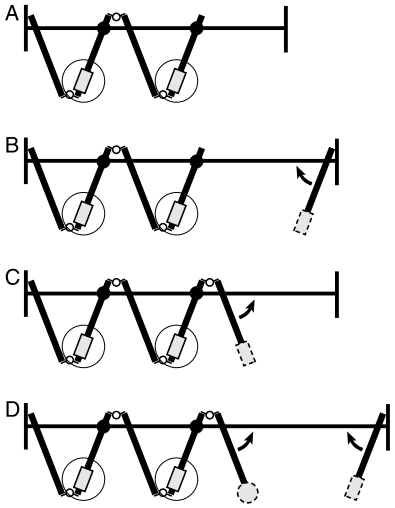

Deadbolt lock or bar bolt lock

Door edge bar not supplied by Hawa AG

Mortice lock not supplied by Hawa AG

Pivot door

Bar bolt lock

Bar bolt lock code 19592 allows locking the folding wall at handle height.

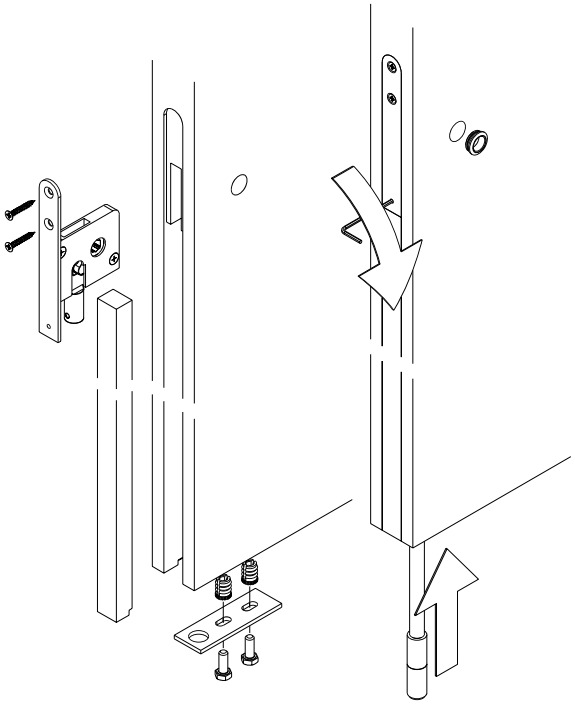

Subject to modification. Metric specifications are exact. Inches are approximate.